WAS P-73-6101

1. PARTS COMPLY WITH AMP SOLDERABILITY SPEC. NO. 109-11-3

2. CONTACT IS PLATED OVERALL WITH .000050 NICKEL, THEN .000030 GOLD OVER CONTACT LENGTH INDICATED AND MATTE TIN ON SOLDER TAIL END.

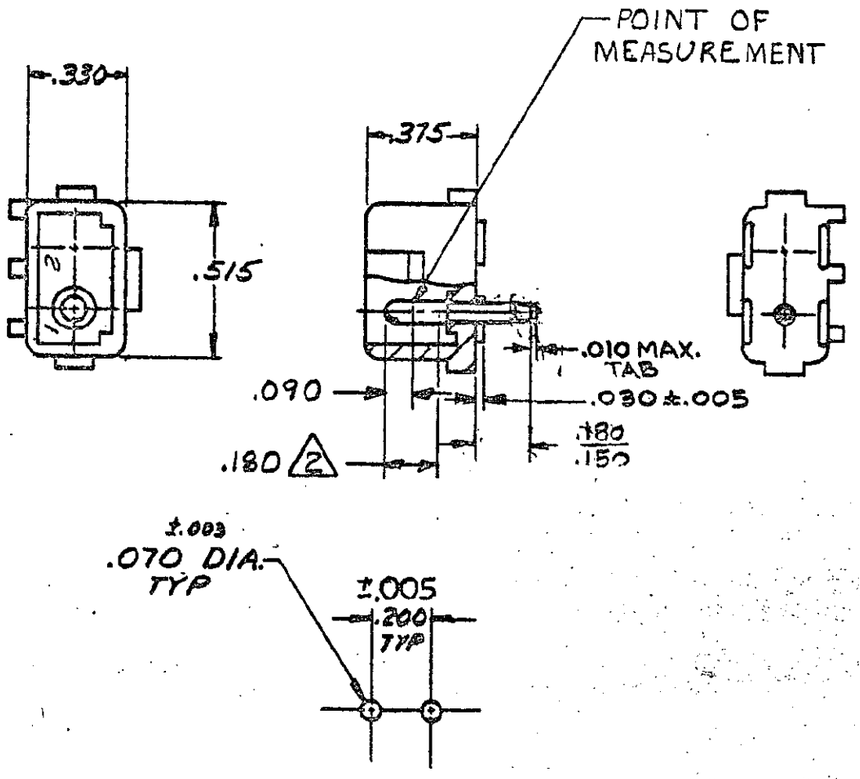

RECOMMENDED LAYOUT FOR .062 THICK P.C. BOARD

-2	-NATURAL	-GOLD 2
6- -1	-BLUE	-PRE TIN
2- -1	-RED	-
350539-1	NYLON - NATURAL	COPPER ALLOY-PRE-TIN
ASSEMBLY NO.	HSG MATL & COLOR	PIN MATL & FINISH

© 1973 BY AMP INCORPORATED. ALL RIGHTS RESERVED. AMP PRODUCTS COVERED BY PATENTS AND/OR PATENTS PENDING.

CUSTOMER COPY REFERENCE ONLY

REQUIRED PER ASSEMBLY

NUMBER 350539

DESCRIPTION

LTR	REVISION RECORD	DR	CHK	DATE
N1	REVISED PER ECO-11-005294	RK	HMR	08APR11

DR G. Edmon 3-29-73

CHK EM Pelton 4/4/73

DE J. Kunkle

APP J. Kunkle

MATERIAL AND FINISH: SEE TABLE

WIRE RANGE INSULATION

TOLERANCE EXCEPT AS NOTED ±.010 SCALE

TE Connectivity

CLASS A .084 DIA. PIN

TYPE POSITIVE LOCK

LOC CM B NO 350539 REV N1

2 CIRCUIT MATE-N-LOK P.C. BOARD HEADER

DIMENSIONS IN INCHES. DO NOT SCALE PRINT.