THIS COPY IS PROVIDED ON A RESTRICTED BASIS AND IS NOT TO BE USED IN ANY WAY DETRIMENTAL TO THE INTERESTS OF PANDUIT CORP.

PANDUIT P/N	WEIGHT
IABDIN4	3.9 LBS 1.8 kg

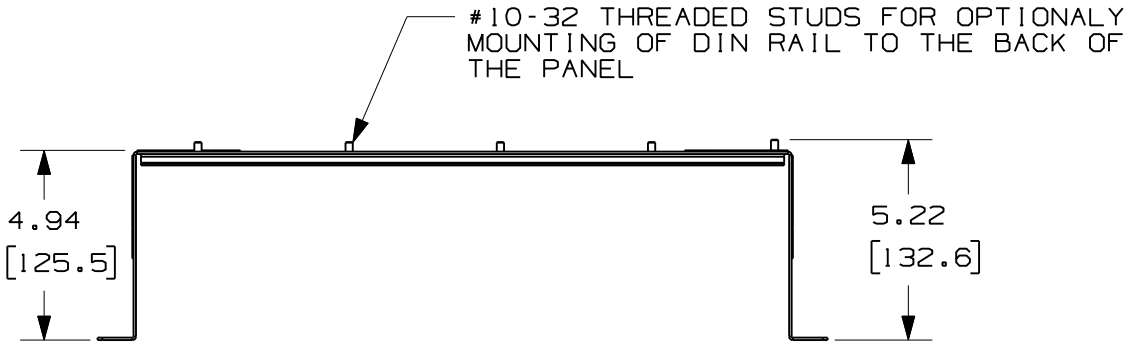

NOTES:
1. VISIT OUR ON-LINE CATALOG AT WWW.PANDUIT.COM FOR A CURRENT LIST OF PRODUCTS APPLICABLE FOR USE WITH THIS PART.
2. COMPONENTS:
   1 - 19" EIA RACK PANEL
   1 - 35mm x 7.5mm DIN RAIL
   2 - CABLE PASS THROUGH GROMMETS
   1 - BAG OF (4) #12-24 MOUNT SCREWS
   1 - BAG OF (4) M6 METRIC SCREWS
3. DIMENSIONS IN PARENTHESES ARE IN METRIC.

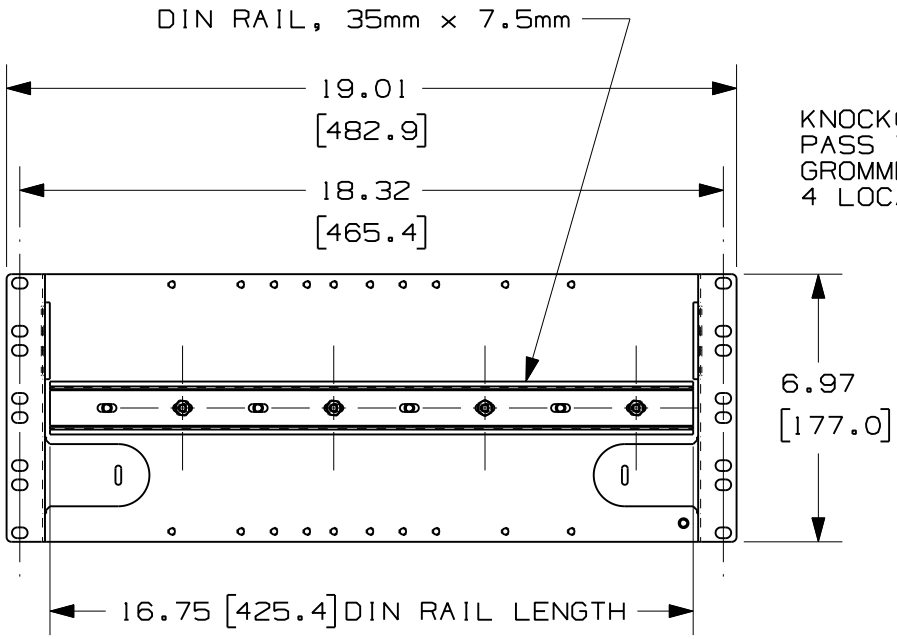

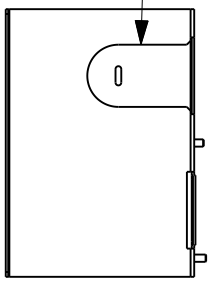

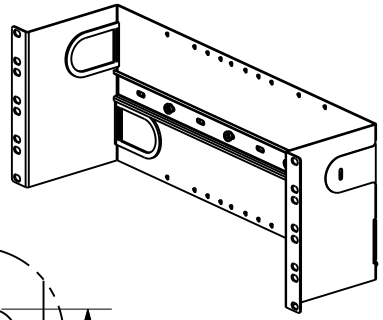

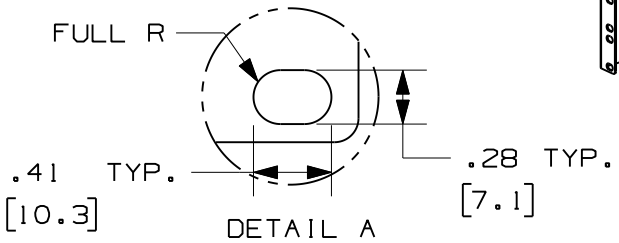

REV	DATE	BY	CHK	DESCRIPTION	ECN	CHK	CUST	SUP
02A	1-26-11	WWL		RELEASED TO PRODUCTION	V01759EY			

CAD FILENAME/LAYERS: V01759EY_DC_02A.PRT

PANDUIT CORP TINLEY PARK, ILLINOIS

19 " DIN RAIL PANEL
IADBIN4 CUSTOMER DRAWING

UNLESS OTHERWISE SPECIFIED, DIMENSIONAL TOLERANCES ARE:
(.X) ± (.XXX) ±.010(.3)
(.XX) ±.03(.8) ANGLES ±

UNLESS OTHERWISE SPECIFIED, ALL DIMENSIONS ARE GIVEN IN INCHES, THIRD ANGLE PROJECTION

DRAWN BY: WWL
DATE: 1-26-11
CK'D:
MAT'L/COLOR:
SCALE: 1:5
DRAWING NO.: V01759EY_DC
DWG SIZE: A