Apr.1.2017 Copyright 2017 HIROSE ELECTRIC CO., LTD. All Rights Reserved.

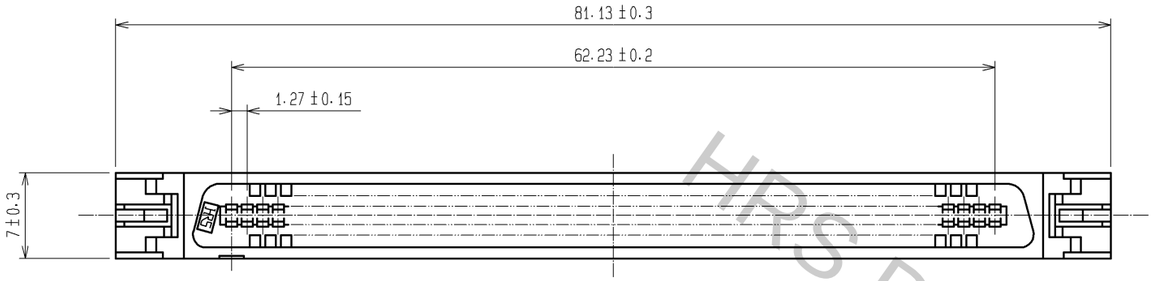

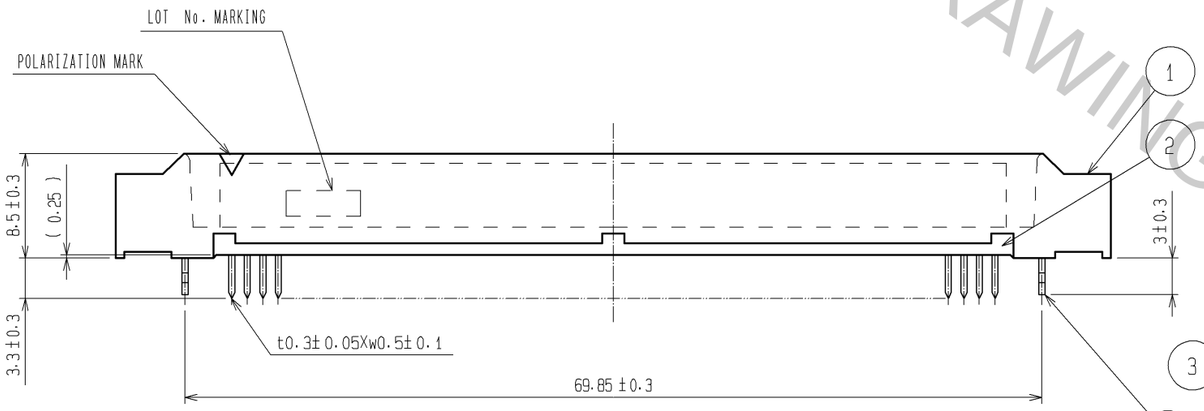

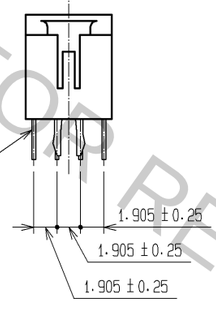

RECOMMENDED PC BOARD HOLE PATTERN(MOUNTING SIDE)(FREE)

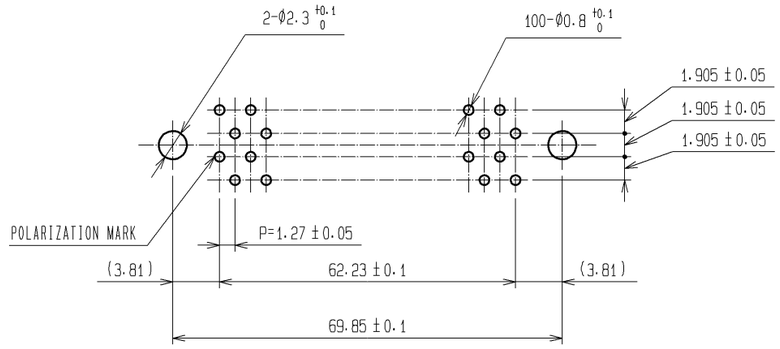

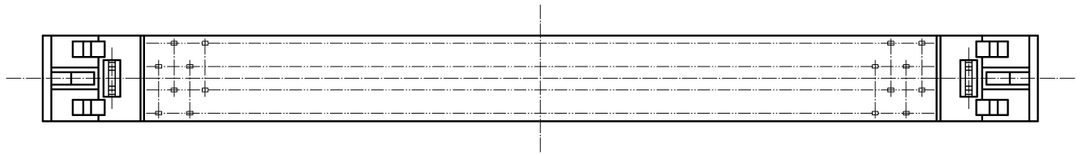

NOTE 1 THE DIMENSIONS IN PARENTHESES ARE FOR REFERENCE.

HRS DRAWING FOR REFERENCE

NO.	MATERIAL	FINISH , REMARKS	NO.	MATERIAL	FINISH , REMARKS
4	PHOSPHOR BRONZE	TIN-PLATING	3	PHOSPHOR BRONZE	CONTACT AREA:GOLD 0.2 μm min. DIP AREA:TIN-PLATING 2μm min. UNDER PLATING:NICKEL 2μm min.
1,2	POLYAMIDE	BLACK UL94V-0			

UNITS	SCALE	COUNT	DESCRIPTION OF REVISIONS	DESIGNED	CHECKED	DATE
mm	2 : 1					

HRS HIROSE ELECTRIC CO., LTD.

APPROVED	: HS. OKAWA	08. 07. 16	DRAWING NO.	EDC3-082377-21
CHECED	: HT. YAMAGUCHI	08. 07. 16	PART NO.	FX2B-100P-1.27DSAL(71)
DESIGNED	: KN. SHIBUYA	08. 07. 15	CODE NO.	CL572-0858-1-71
DRAWN	: AH. EDASHIGE	08. 06. 17		1/1

FORM HC0011-5-7